Gpixel

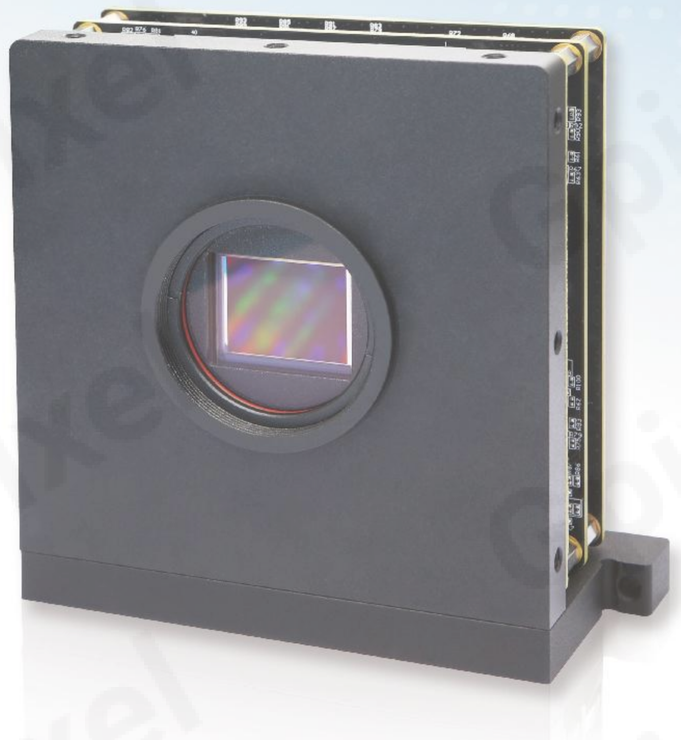

GSPRINT4510
Evaluation Kit

General Description

Gpixel's evaluation platform supports CoaXPress 2.0 or USB3.0 Interface, is ideal for an easy and accurate evaluation of the GSPRINT4510 CMOS sensor. Its form factor, the GenICam compatibility and external triggering options provide flexible setup options in both lab and industrial environments. The high-speed CoaXPress /USB3.0 interface ensures a smooth, real-time imaging experience.

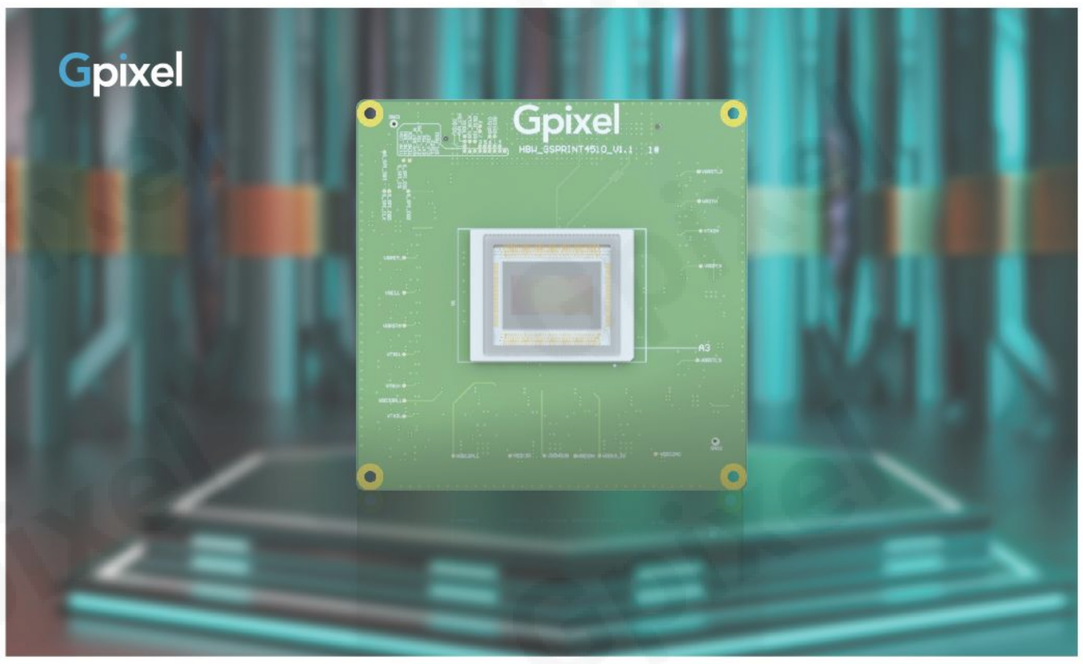

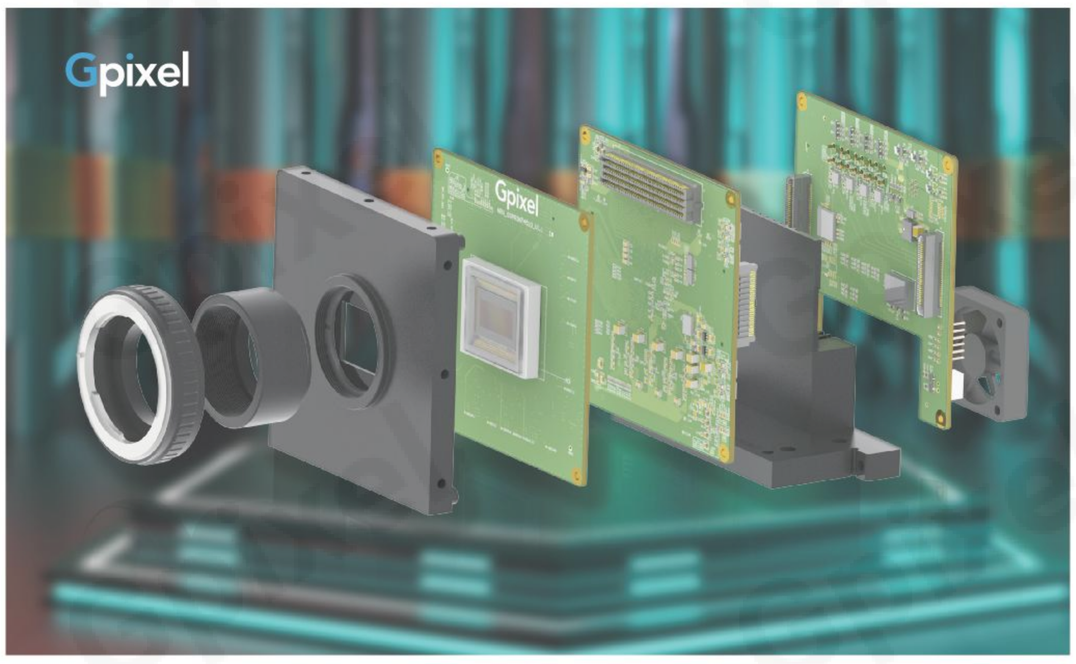

Key Features

- CoaXPress 2.0 Interface/USB3.0 Interface
- Raw Image Output
- 8/10/12-bit Modes
- Normal, Binned or Windowed Readout
- GenICam Compatible
- User-friendly Form Factor
- M42- and F-mount

Specifications

Item	Description
Sensor	GSPRINT4510
Output Interface	CoaXPress 2.0/USB3.0
Resolution (H x V)	4608 x 2176
Frame Rates	Normal: 392fps (8b) / 301fps (12b)@ CoaXPress 2.0 38fps (8b) / 19fps (12b)@ USB3.0 Binned: 1460fps (8b) / 1127fps (12b) @ CoaXPress 2.0 157fps (8b) / 78fps (12b)@ USB3.0
Exposure Time	1s ~ 49.99s
Pixel Bit Depth	8/10/12-bit
Trigger Mode	External / Free Running
Lens Mount	M42-mount / F-mount
Power Supply	10 – 25V
Power Consumption	Typical 23.5W@12V DC @CoaXPress 2.0 Typical 14.2W@12V DC @USB3.0
Operating Temperature	0-50°C

Ordering Information

HBW - GSPRINT4510 M - CXP2.0

Platform
HBW Platform

Sensor
GSPRINT4510

Chromaticity
M: Mono
C: Color

Interface
CXP2.0: CoaXPress 2.0
U3V: USB3.0

Note: Sensor is soldered on the PCB

Evaluation Kit Includes

- Evaluation module
- Power Cable with DC plug and trigger
- DC Plug adapter 2.1mm to 2.5mm
- Extension ring M42 to M42
- F-mount adapter
- USB Cable Type-A to Micro-B (only USB3.0 Interface)

Note: a CXP2.0 frame grabber and four CXP cables are required to use this evaluation kit.

Mechanical Drawing

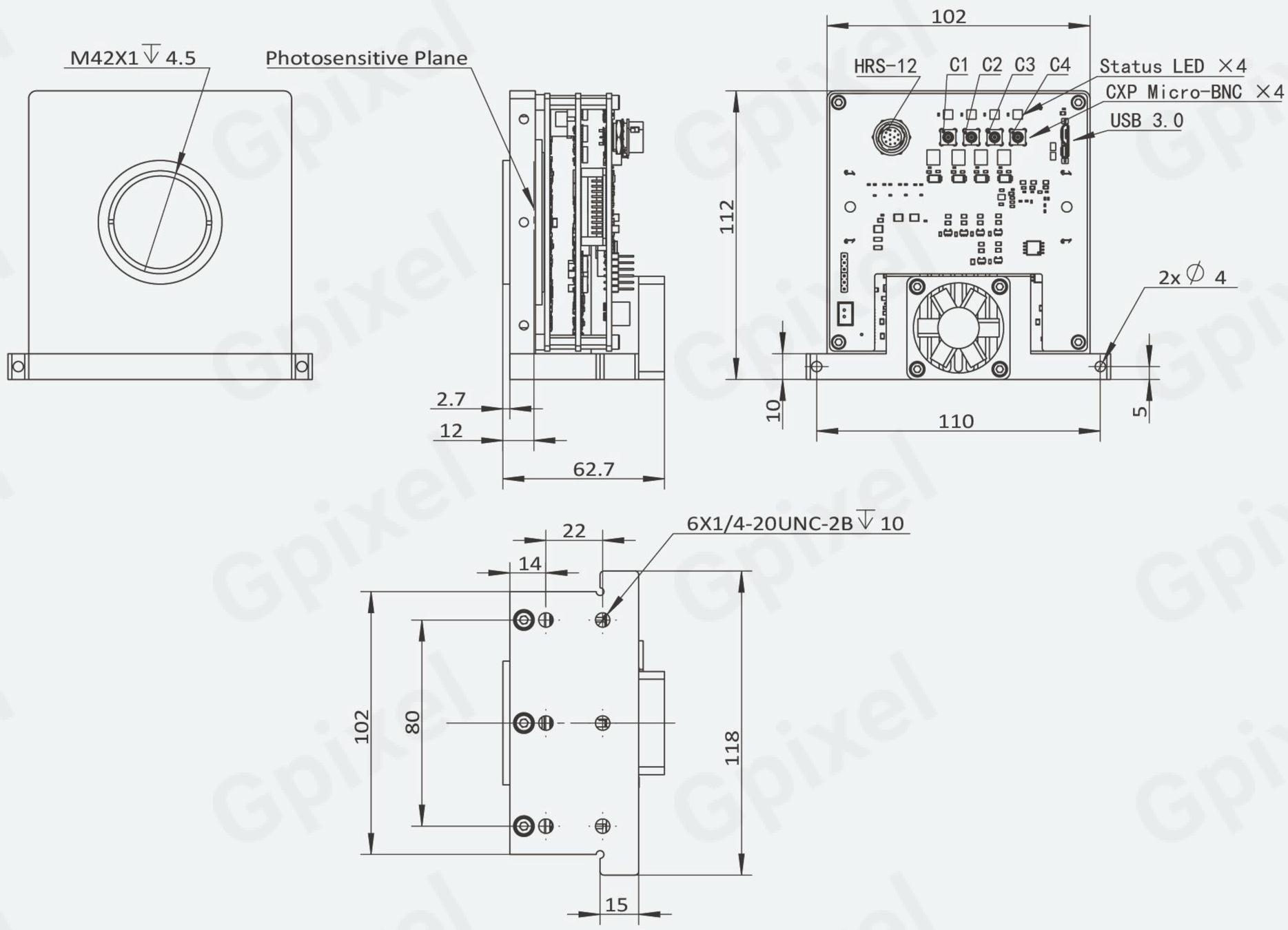

Note: HBW-GSPRINT4510M-CXP2.0 only has CXP Micro-BNC connector,
HBW- GSPRINT4510M-U3V only has USB 3.0 Micro-B connector.

Contact Gpixel HQ

Add:Building #5, Optoelectronic Information Industrial Park, #7691 Ziyou Road, Changchun, Jilin, China.

Tel: +86-0431-85077785
Email: info@gpixel.com
Website: www.gpixel.com

Revision 20231019